Technical Specifications

Electrical Characteristics	
Voltage Supply	230V +10 -15% 50/60Hz
Consumption	1.5VA
Output	1 Changeover Contact 2A 230V AC1
Functional Characteristics	
3 Temperature Ranges Controllable by External Setting	Comfort: Adjustable from +5 to +30°C Reduced: Decrease 2 to 8°C in Comparison with Comfort Setting Frost setting: Adjustable from +5 to +30°C Accuracy ±0.2°C
Environment	
Working Temperature	-10 to +50°C
Storage Temperature	-20 to +70°C
Connection Capacity	
Flexible	1 to 6mm²
Rigid	1.5 to 10mm²
Probe	Maximum Distance 50m

Product Presentation

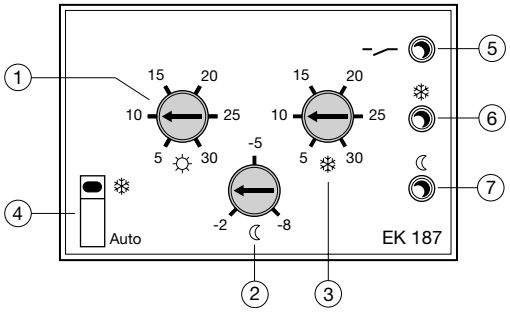

1. Reference setting: comfort TO
2. Decrease in comparison with reference setting: reduced to TO
3. Frost setting
4. Frost setting override
5. Display of state of output i.e. contact position
6. LED indicating the frost override is on.
7. LED indicating the regulation in comparison with a reduced setting

Electrical Connection

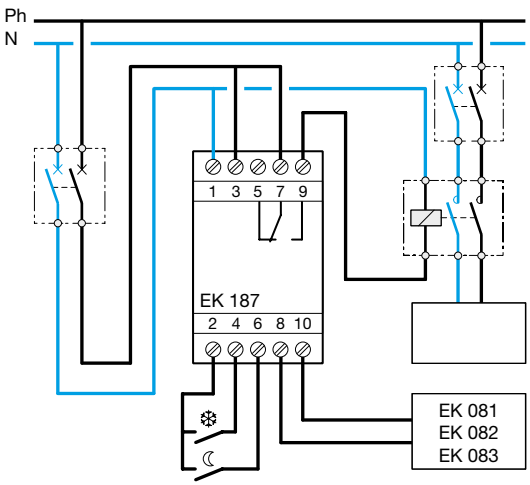

Main Characteristics

- **Temperature settings controllable by external setting** when associating a digital time switch, it is possible to regulate the heating in relation with a program established by the user.
- **2 wires link** between the probe and the unit, enables the easy replacement of the ambient thermostats of an existing installation.
- **Safety feature for "probe failure"** in case of probe disconnection, the output will be switched 1 minute in every 4; so that in case of disconnection during winter, it will protect the installation from frost.
- **Display** of state of the output and of the setting.

Working Principle

EK187 adjusts the temperature under the "all or nothing" principle it is associated to an ambient probe and thus works in closed loop the temperature settings are selected by external settings (contacts free of potential).
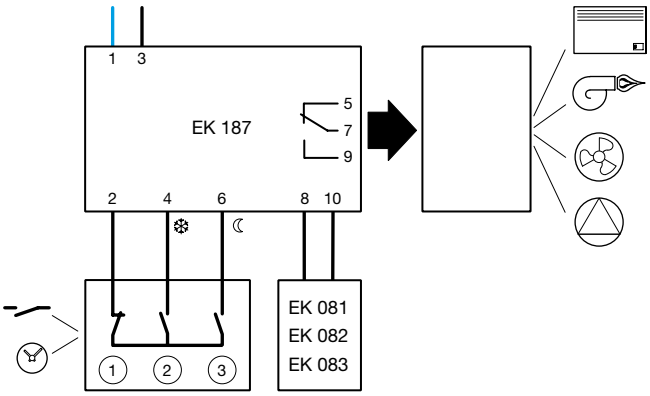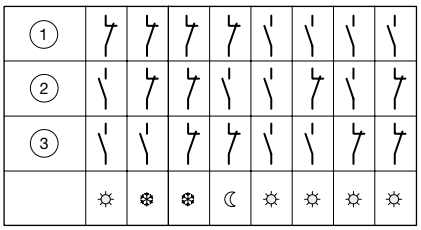
EK187 is thus generally associated to a time switch or a digital time switch in the case of absence of external signal, EK187 regulates the heating in comparison with the reference setting, a switch enables the override of the dispensation setting.